STEEL BOW GUIDE INSTALLATION

MODEL# A482-0022
5K - 10K

1: Base Weldment (Qty 2)
2: Mid Weldment (Qty 2)
3: Loop Tube (Qty 1)
4: Top Tube (Qty 2)
5: Foam pad (Qty 2, add on)
6: Bolt (Qty 8)
7: Washer (Qty 16)
8. Nylock Nut (QTY 8)
10: Set Screw (Qty 6)
11: Spacer (Qty 4)

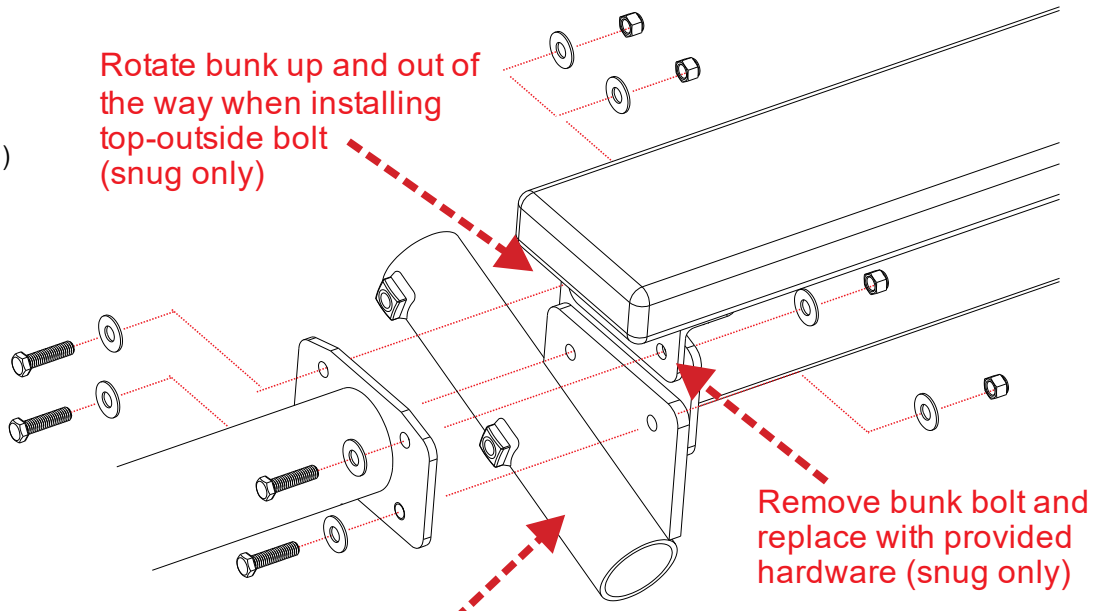

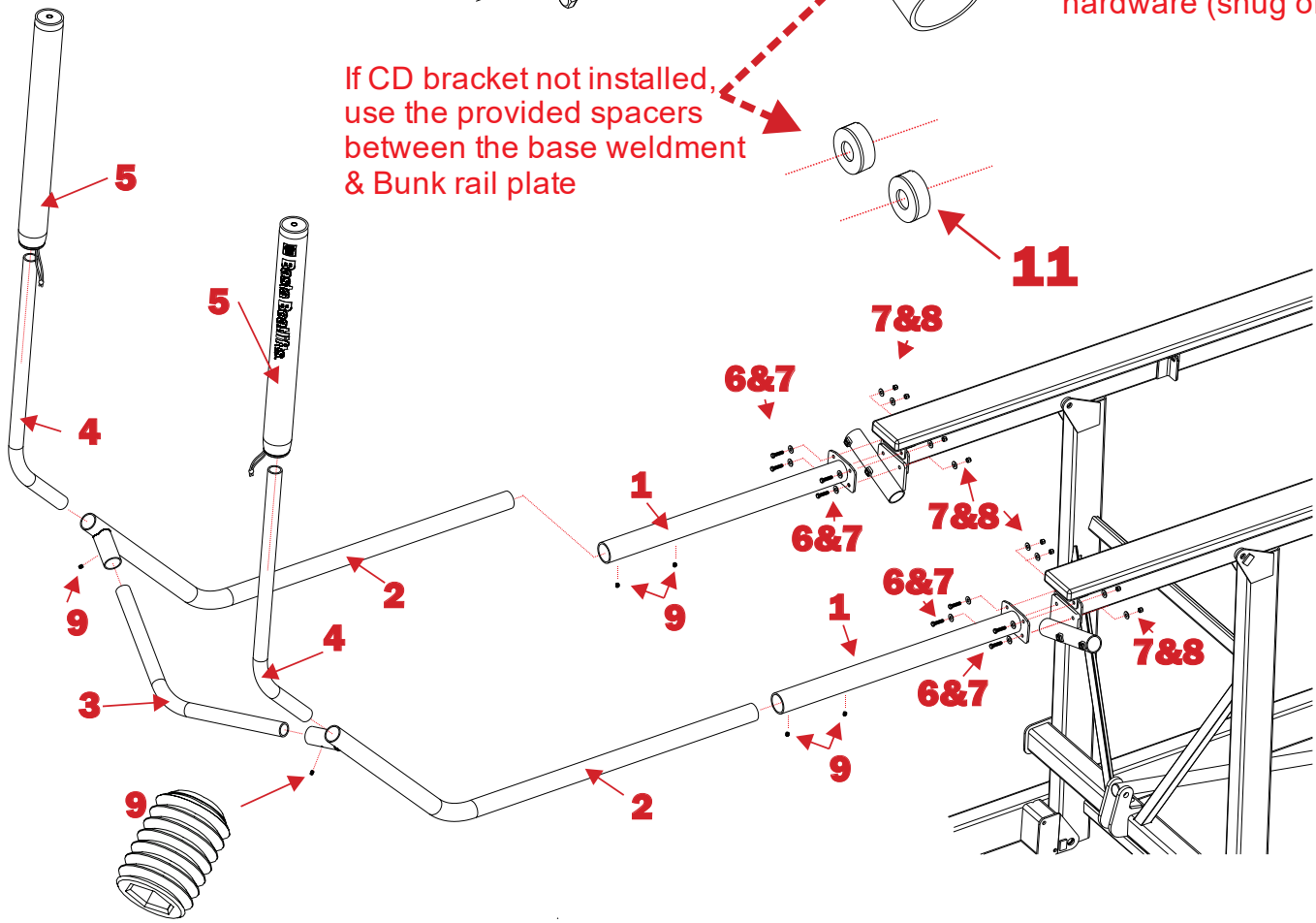

© Basta, Inc. 2026